PROPOSED SITE PLAN
FOR
PGB REALTY TRUST
263 WEST MAIN STREET
TOWN OF DUDLEY
WORCESTER COUNTY, MASSACHUSETTS

TOWN OF DUDLEY PLANNING BOARD APPROVAL:

_____

_____

_____

_____

_____

DATE: _____

RECORD OWNERS
PGB REALTY TRUST
DB 24466 PG 68
DB 29484 PG 300
DB 43974 PG 274

TAX MAP REFERENCES:
121–6
121–7
121–2.1
121–10

TOWN OF DUDLEY ZONING
ZONE – BUS–15
AREA – 15,000 S.F.
FRONTAGE – 100'
FRONT – 20 FT.
SIDE – 10 FT.
REAR – 35 FT.

ZONE – RES–30
AREA – 30,000 S.F.
FRONTAGE – 100'
FRONT – 35 FT.
SIDE – 15 FT.
REAR – 25 FT.

NO DETERMINATION OF COMPLIANCE WITH ZONING REQUIREMENTS HAS BEEN MADE OR INTENDED

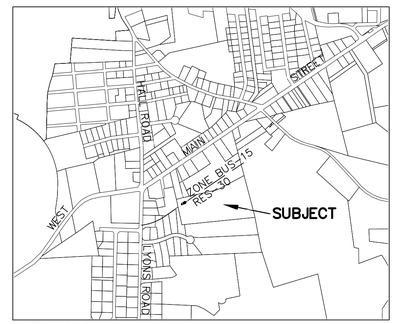

LOT LOCUS
SCALE: 1"=1000'

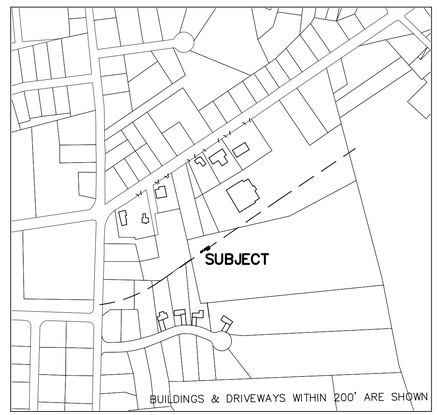

VICINITY MAP
SCALE: 1"=400'

GENERAL NOTES:

1. BOUNDARIES SHOWN ARE THE RESULTS OF AN ACTUAL FIELD SURVEY BASED ON AVAILABLE MAPS, DEEDS OF RECORD AND PHYSICAL EVIDENCE, BUT ARE SUBJECT TO ALL EASEMENTS, RIGHT OF WAYS, AGREEMENTS, AND RIGHTS AND ENCUMBRANCES OF RECORD THAT AN ACCURATE AND THOROUGH TITLE SEARCH MAY DISCLOSE.

2. LOCATION AND DEPTH OF ALL UNDERGROUND UTILITIES SHOWN ARE APPROXIMATE AND ARE BASED ON OBVIOUS ABOVE GROUND PHYSICAL UTILITY APPURTENANCES AND ACCESSIBLE MANHOLES. DIG SAFE SHALL BE NOTIFIED PRIOR TO ANY EXCAVATION OR CONSTRUCTION. ADDITIONAL UNDERGROUND UTILITIES MAY EXIST.

3. HORIZONTAL DATUM BASED ON PLAN BOOK 883 PLAN 73.

4: VERTICAL DATUM BASED ON NAVD 88, GEOID 12A, ESTABLISHED VIA GNSS.

5: BY GEOGRAPHICAL PLOTTING ONLY THE SITE IS NOT LOCATED WITHIN A SPECIAL FLOOD HAZARD ZONE AS PER THE FLOOD INSURANCE RATE MAP, COMMUNITY–PANEL NO. # 250303 0005B, WITH AN EFFECTIVE DATE OF JUNE 15, 1981.

6: ANY CONTRACTOR SHOULD BE AWARE OF THE RESPONSIBILITY TO THE WETLANDS PROTECTION ACT. IF ANY CONSTRUCTION IS SUBJECT TO THE ACT A NOTICE OF INTENT MUST BE SUBMITTED TO THE LOCAL CONSERVATION COMMISSION AND DEP PRIOR TO ANY WORK.

7: TOPOGRAPHY AND TOPOGRAPHIC FEATURES PROVIDED VIA AN ON THE GROUND SURVEY BY DC ENGINEERING.

8: ABUTTERS NAMES ARE IN RESPECT TO THE LATEST ASSESSORS RECORDS AVAILABLE.

SYMBOL KEY

MONUMENT	
IRON PIPE	
MONUMENT TO BE SET	MS
DRAIN MANHOLE	DMH
SEWER MANHOLE	SMH
SEWER CLEANOUT	CO.
ELECTRIC MANHOLE	
CATCH BASIN	CB
UTILITY POLE	
UTILITY POLE W/ STREET LIGHT	
GUY WIRE	GUY
FIRE HYDRANT	HYD
WATER GATE	WG
GAS GATE	
BOLLARD	BOL.
LIGHT DECORATIVE (15'± HEIGHT)	
BENCH MARK	
SIGN	
MASSHIGHWAY SIGNAL BOX	M.S.B
MONITOR WELL	MW

CURB LEGEND

VERTICAL GRANITE CURB	VGC
BITUMINOUS CONCRETE CURB	BTC

CHAIN LINK FENCE	x
WOOD / STOCKADE FENCE	
WATER LINE	W
SEWER LINE	S
DRAIN LINE	D
GAS LINE	G
ELECTRIC LINE	E
OVERHEAD WIRES	OHW
CONTOUR 5' INTERVAL	
CONTOUR 1' INTERVAL	
X 69.33'	SPOT GRADE
BITUMINOUS	BIT.
CONCRETE	CONC.
INVERT	INV.
REINFORCED CONCRETE PIPE	RCP
POLYVINYL CHLORIDE PIPE	PVC
HIGH DENSITY PLASTIC	HDPE
IRON PIPE	I.P.
FOUND	FND.
BOLLARD	BOL.
SEWER MANHOLE	SMH
DRAINAGE MANHOLE	DMH
WATER GATE	WG
HYDRANT	HYD.
UTILITY POLE	UP
GUY WIRE	GUY

EXISTING LAND USE: FIELD (PREVIOUSLY GOLF RANGE), AUTO BODY REPAIR, VEHICLE RENTAL

PROPOSED LAND USE: (PARKING/AUTO BODY REPAIR)

OWNER/APPLICANT:
RGB REALTY TRUST
263 WEST MAIN STREET
DUDLEY, MA 01571
508.667.7383

ENGINEER:
DC ENGINEERING & SURVEY, INC.
32 CRANBERRY MEADOW ROAD
CHARLTON, MA 01507

DRAWING LIST

C	COVER SHEET
X–1	EXISTING PLAN OF LAND
S–1	SITE PLAN
EC–1	EROSION CONTROL PLAN
D–1	CONSTRUCTION DETAILS

COMMONWEALTH OF MASSACHUSETTS
JASON D. DUBOIS
CIVIL
NO. 48724
REGISTERED PROFESSIONAL ENGINEER

NO.	DATE	REVISION	BY
1	5/4/20	REVISED PER COMMENTS	JDD

JASON D. DUBOIS, P.E.
PROFESSIONAL ENGINEER
MA.LIC.NO.: 48724

JEREMY S. CROTEAU, P.L.S.
PROFESSIONAL LAND SURVEYOR
LIC.NO.: 48722

NORTH
W E
S
MAGNETIC NORTH
Note:

COVER SHEET
SITE ADDRESS:
263 West Main Street
Dudley, MA 01571

CLIENT:
PGB REALTY TRUST
263 West Main Street
Dudley, MA 01571

DRAWN BY: JSC	
CK'D BY: JDD	REV #: 1
DATE: 1–8–2020	SCALE: 1"=40'
PROJECT #: 20–101	DWG. NO.: C

DC ENGINEERING & SURVEY INC.
32R CRANBERRY MEADOW RD
CHARLTON, MA
508–769–6859
508–341–2127

TOWN OF DUDLEY PLANNING BOARD APPROVAL:

DATE:

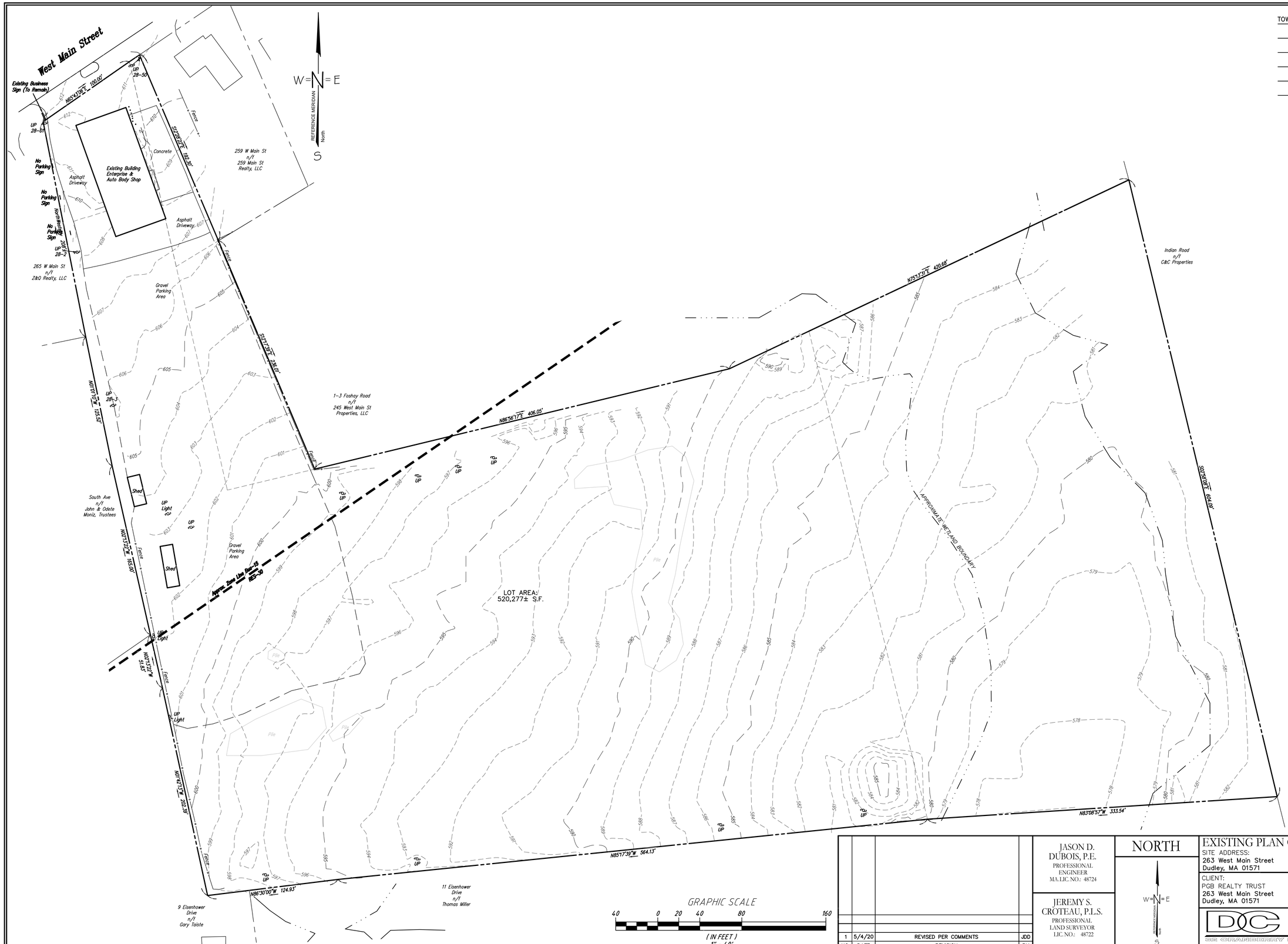

GRAPHIC SCALE

40 0 20 40 80 160

(IN FEET)
1" = 40'

NO.	DATE	REVISION	BY
1	5/4/20	REVISED PER COMMENTS	JDD

JASON D. DUBOIS, P.E.
PROFESSIONAL ENGINEER
MA.LIC.NO.: 48724

JEREMY S. CROTEAU, P.L.S.
PROFESSIONAL LAND SURVEYOR
LIC.NO.: 48722

NORTH

W=N=E

REFERENCE MERIDIAN
North

EXISTING PLAN OF LAND

SITE ADDRESS:
263 West Main Street
Dudley, MA 01571

CLIENT:
PGB REALTY TRUST
263 West Main Street
Dudley, MA 01571

DRAWN BY:	JSC
CK'D BY: JDD	REV #: 1
DATE: 1-8-2020	SCALE: 1"=40'
PROJECT #: 20-101	DWG. NO.: X-1

DC ENGINEERING & SURVEY INC.
856 STRAWBERRY HILL/OLD RTE 20
CHARLTON, MA
508-769-6659
508-341-2127

COMMONWEALTH OF MASSACHUSETTS
JASON D. DUBOIS
CIVIL
NO. 48724
REGISTERED PROFESSIONAL ENGINEER

TOWN OF DUDLEY PLANNING BOARD APPROVAL:

DATE:

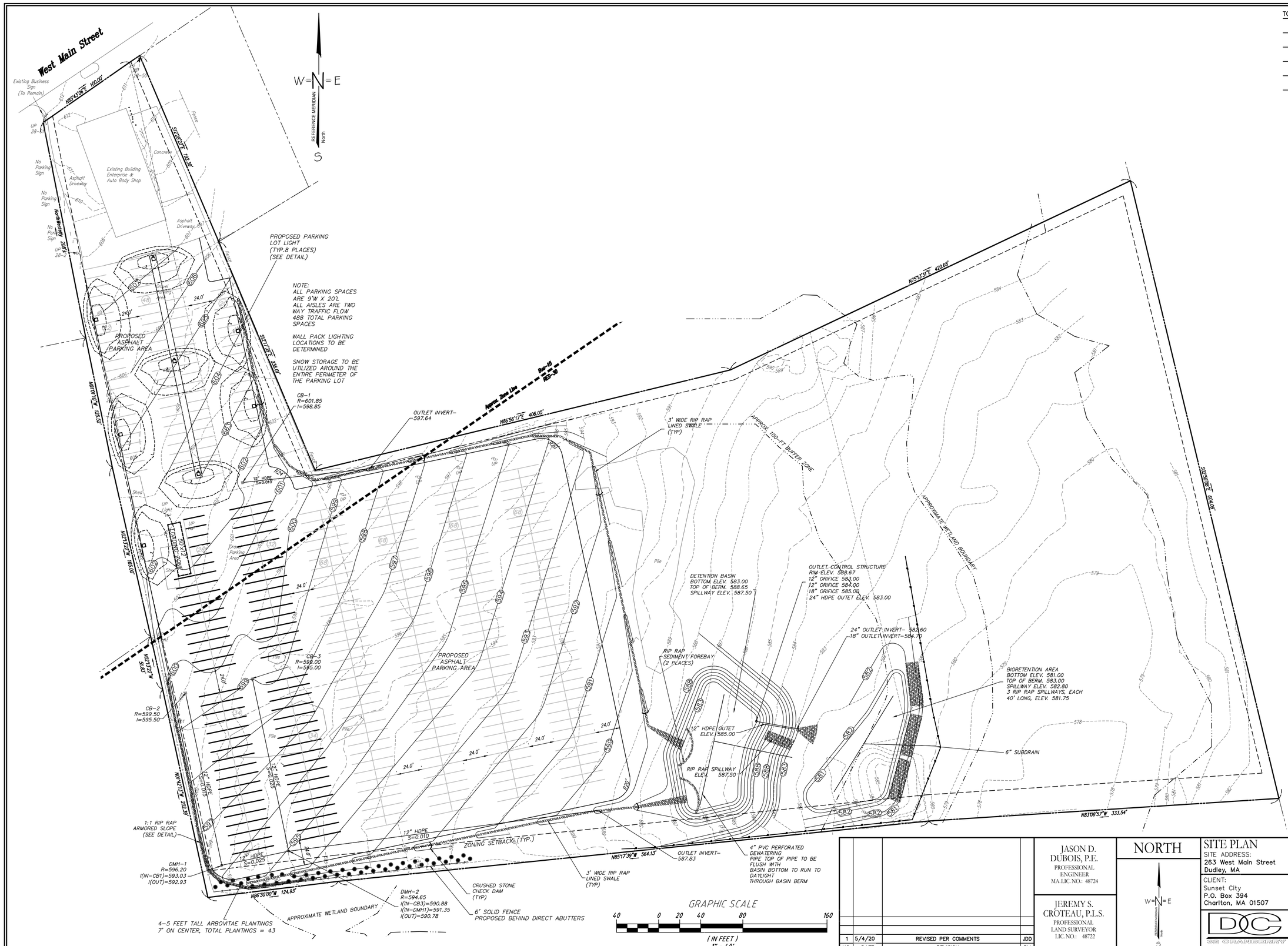

NO.	DATE	REVISION	BY
1	5/4/20	REVISED PER COMMENTS	JDD

JASON D. DUBOIS, P.E.
PROFESSIONAL ENGINEER
MA.LIC.NO.: 48724

JEREMY S. CROTEAU, P.L.S.
PROFESSIONAL LAND SURVEYOR
LIC.NO.: 48722

NORTH

W=N=E
REFERENCE MERIDIAN
North
S

SITE PLAN

SITE ADDRESS:
263 West Main Street
Dudley, MA

CLIENT:
Sunset City
P.O. Box 394
Charlton, MA 01507

DRAWN BY:	JSC
CK'D BY: JDD	REV #: 1
DATE: 1-8-2020	SCALE: 1'=40'
PROJECT #: 20-101	DWG. NO.: S-1

DOC ENGINEERING & SURVEY INC.
82 CRANBERRY MEADOW RD
CHARLTON, MA
508-769-6820
508-341-2127

TOWN OF DUDLEY PLANNING BOARD APPROVAL:

DATE:

GENERAL EROSION NOTES:

A. THE STORM WATER POLLUTION PREVENTION PLAN IS COMPRISED OF THIS DRAWING ("SITE MAP"), THE STANDARD DETAILS, THE PLAN NARRATIVE.

B. ALL CONTRACTORS AND SUBCONTRACTORS INVOLVED WITH STORM WATER POLLUTION PREVENTION SHALL OBTAIN A COPY OF THE STORM WATER POLLUTION PREVENTION PLAN AND THE STATE OF MASSACHUSETTS NATIONAL POLLUTANT DISCHARGE ELIMINATION SYSTEM GENERAL PERMIT (NPDES PERMIT) AND BECOME FAMILIAR WITH THEIR CONTENT.

C. CONTRACTOR SHALL IMPLEMENT BEST MANAGEMENT PRACTICES (BMP's) AS REQUIRED BY THE SWPPP. ADDITIONAL BEST MANAGEMENT PRACTICES SHALL BE IMPLEMENTED AS DIRECTED BY CONDITIONS AT NO ADDITIONAL COST OF OWNER THROUGHOUT ALL PHASES OF CONSTRUCTION.

D. BMP's AND CONTROLS SHALL CONFORM TO FEDERAL, STATE OR LOCAL REQUIREMENTS OR MANUAL OF PRACTICE, AS APPLICABLE CONTRACTOR SHALL IMPLEMENT ADDITIONAL CONTROLS AS DIRECTED BY PERMITTING AGENCY OR OWNER.

E. SITE MAP MUST CLEARLY DELINEATE ALL STATE WATERS, PERMITS FOR ANY CONSTRUCTION ACTIVITY IMPACTING STATE WATERS OR REGULATED WETLANDS MUST BE MAINTAINED ON SITE AT ALL TIMES.

F. CONTRACTOR SHALL MINIMIZE CLEARING TO THE MAXIMUM EXTENT PRACTICAL OR AS REQUIRED BY THE GENERAL PERMIT.

G. GENERAL CONTRACTOR SHALL DENOTE ON PLAN THE TEMPORARY PARKING AND STORAGE AREA WHICH SHALL ALSO BE USED AS THE EQUIPMENT MAINTENANCE AND CLEANING AREA, EMPLOYEE PARKING AREA AND AREA FOR LOCATING PORTABLE FACILITIES, OFFICE TRAILERS. AND TOILET FACILITIES.

H. ALL WASH WATER (CONCRETE TRUCKS, VEHICLE CLEANING, EQUIPMENT CLEANING, ETC.) SHALL BE DETAINED AND PROPERLY TREATED OR DISPOSED.

I. SUFFICIENT OIL AND GREASE ABSORBING MATERIALS AND FLOTATION BOOMS SHALL BE MAINTAINED ON SITE OR READILY AVAILABLE TO CONTAIN AND CLEANUP FUEL OR CHEMICAL SPILLS AND LEAKS.

J. DUST ON THE SITE SHALL BE CONTROLLED. THE USE OF MOTOR OILS AND OTHER PETROLEUM BASED OR TOXIC LIQUIDS FOR DUST SUPPRESSION OPERATIONS IS PROHIBITED.

K. RUBBISH, TRASH, GARBAGE, LITTER, OR OTHER SUCH MATERIALS SHALL BE DEPOSITED INTO SEALED CONTAINERS, MATERIALS SHALL BE PREVENTED FROM LEAVING THE PREMISES THROUGH THE ACTION OF WIND OR STORM WATER DISCHARGE INTO DRAINAGE DITCHES OR WATER OF THE STATE.

L. ALL STORM WATER POLLUTION PREVENTION MEASURES PRESENTED ON THIS PLAN, AND IN THE STORM WATER POLLUTION PREVENTION PLAN, SHALL BE INITIATED AS SOON AS PRACTICABLE.

M. DISTURBED PORTIONS OF THE SITE WHERE CONSTRUCTION ACTIVITY HAS STOPPED FOR AT LEAST 21 DAYS, SHALL BE TEMPORARILY SEEDED. THESE AREAS SHALL BE SEEDED NO LATER THAN 14 DAYS FROM THE LAST CONSTRUCTION ACTIVITY OCCURRING IN THESE AREAS.

N. DISTURBED PORTIONS OF THE SITE WHERE CONSTRUCTION ACTIVITY HAS PERMANENTLY STOPPED SHALL BE PERMANENTLY SEEDED. THESE AREAS SHALL BE SEEDED NO LATER THAN 14 DAYS FROM THE LAST CONSTRUCTION ACTIVITY OCCURRING IN THESE AREAS. REFER TO THE GRADING PLAN AND/OR LANDSCAPE PLAN.

O. IF THE ACTION OF VEHICLES TRAVELING OVER THE GRAVEL CONSTRUCTION ENTRANCES IS NOT SUFFICIENT TO REMOVE THE MAJORITY OF DIRT OF MUD, THEN THE TIRES MUST BE WASHED BEFORE THE VEHICLES ENTER A PUBLIC ROAD. IF WASHING IS USED, PROVISIONS MUST BE MADE TO INTERCEPT THE WASH WATER AND TRAP THE SEDIMENT BEFORE IT IS CARRIED OFF THE SITE.

P. ALL MATERIALS SPILLED, DROPPED, WASHED OR TRACKED FROM VEHICLES ONTO ROADWAYS, OR INTO STORM DRAINS MUST BE REMOVED IMMEDIATELY.

Q. CONTRACTORS OR SUBCONTRACTORS WILL BE RESPONSIBLE FOR REMOVING SEDIMENTS IN THE DETENTION POND AND ANY SEDIMENT THAT MAY HAVE COLLECTED IN THE STORM SEWER DRAINAGE SYSTEMS IN CONJUNCTION WITH THE STABILIZATION OF THE SITE.

R. ON-SITE & OFF-SITE SOIL STOCKPILE AND BORROW AREAS SHALL BE PROTECTED FROM EROSION AND SEDIMENTATION THROUGH IMPLEMENTATION OF BMP's. STOCKPILE AND BORROW AREA LOCATION SHALL BE NOTED ON THE SITE MAP AND PERMITTED IN ACCORDANCE WITH GENERAL PERMIT REQUIREMENTS.

S. SLOPES SHALL BE LEFT IN A ROUGHENED CONDITION DURING THE GRADING PHASE TO REDUCE RUNOFF VELOCITIES AND EROSION.

T. DUE TO THE GRADE CHANGES DURING THE DEVELOPMENT OF THE PROJECT, THE CONTRACTOR SHALL BE RESPONSIBLE FOR ADJUSTING THE EROSION CONTROL MEASURES (SILT FENCES, STRAW BALES, ETC) TO PREVENT EROSION.

U. ALL CONSTRUCTION SHALL BE STABILIZED AT THE END OF EACH WORKING DAY, THIS INCLUDES BACK FILLING OF TRENCHES FOR UTILITY CONSTRUCTION AND PLACEMENT OF GRAVEL OR BITUMINOUS PAVING FOR ROAD CONSTRUCTION.

V. ALL PERIMETER DIKES, SLOPES, BASIN OR TRAP EMBANKMENTS WILL BE STABILIZED WITH SOD, HYDROSEED, AND/OR STRAW MULCH (ANCHORED ON SLOPES GREATER THAN 15%), WITHIN (7) CALENDAR DAYS AFTER DISTURBING ACTIVITIES HAVE CEASED.

NOTE: PRIOR TO ANY WORK TAKING PLACE

1. A PRE-CONSTRUCTION MEETING SHOULD BE SCHEDULED BETWEEN DC ENGINEERING AND CONSTRUCTION MANAGER. ALL ASPECTS OF EROSION CONTROLS AND CONSTRUCTION OF PROJECT ARE TO BE DISCUSSED
2. STRAWBALES AND SILTATION FENCE TO BE INSTALLED. INSTALL STABILIZED CONSTRUCTION ENTRANCE (SITE TRACKING PAD)
3. WEEKLY INSPECTIONS AND AFTER ALL HEAVY RAINFALL ARE TO BE CONDUCTED BY SITE MONITOR AND LOGS ARE TO BE FILLED OUT. ANY REPAIR TO EROSION CONTROL DEVICES ARE TO BE MADE AS NEEDED.

MAINTENANCE:

ALL MEASURES STATED ON THIS EROSION AND SEDIMENT CONTROL PLAN, AND IN THE STORM WATER POLLUTION PREVENTION PLAN AND, SHALL BE MAINTAINED IN FULLY FUNCTIONAL CONDITION UNTIL NO LONGER REQUIRED FOR A COMPLETED PHASE OF WORK OR FINAL STABILIZATION OF THE SITE. ALL EROSION AND SEDIMENTATION CONTROL MEASURES SHALL BE CHECKED BY A QUALIFIED PERSON IN ACCORDANCE WITH THE CONTRACT DOCUMENTS OR THE APPLICABLE PERMIT, WHICHEVER IS MORE STRINGENT, AND REPAIRED IN ACCORDANCE WITH THE FOLLOWING:

1. INLET PROTECTION DEVICES AND BARRIERS SHALL BE REPAIRED OR REPLACED IF THEY SHOW SIGNS OF UNDERMINING, OR DETERIORATION.
2. ALL SEEDED AREAS SHALL BE CHECKED REGULARLY TO SEE THAT A GOOD STAND IS MAINTAINED. AREAS SHOULD BE FERTILIZED, WATERED, AND RE-SEEDED AS NEEDED.
3. SILT FENCES SHALL BE REPAIRED TO THEIR ORIGINAL CONDITIONS IF DAMAGED, SEDIMENT SHALL BE REMOVED FROM THE SILT FENCES WHEN IT REACHED ONE-HALD THE HEIGHT OF THE SILT FENCES.
4. THE CONSTRUCTION ENTRANCE SHALL BE MAINTAINED IN A CONDITION WHICH WILL PREVENT TRACKING OR FLOW OF MUD ONTO PUBLIC RIGHT-OF-WAY. THIS MAY REQUIRE PERIODIC TOP DRESSING OF THE CONSTRUCTION ENTRANCES AS CONDITIONS DEMAND.
5. THE TEMPORARY PARKING AND STORAGE AREA SHALL BE KEPT IN GOOD CONDITION (SUITABLE FOR PARKING AND STORAGE). THIS MAY REQUIRE PERIODIC TOP DRESSING OF THE TEMPORARY PARKING AS CONDITIONS DEMAND.
6. OUTLET STRUCTURES IN THE SEDIMENTATION BASINS SHALL BE MAINTAINED IN OPERATIONAL CONDITIONS AT ALL TIMES. SEDIMENT SHALL BE REMOVED FROM SEDIMENT BASINS OR TRAPS WHEN THE DESIGN CAPACITY HAS BEEN REDUCED BY 50%.

COMMONWEALTH OF MASSACHUSETTS
JASON D. DUBOIS
CIVIL
NO. 48724
REGISTERED PROFESSIONAL ENGINEER

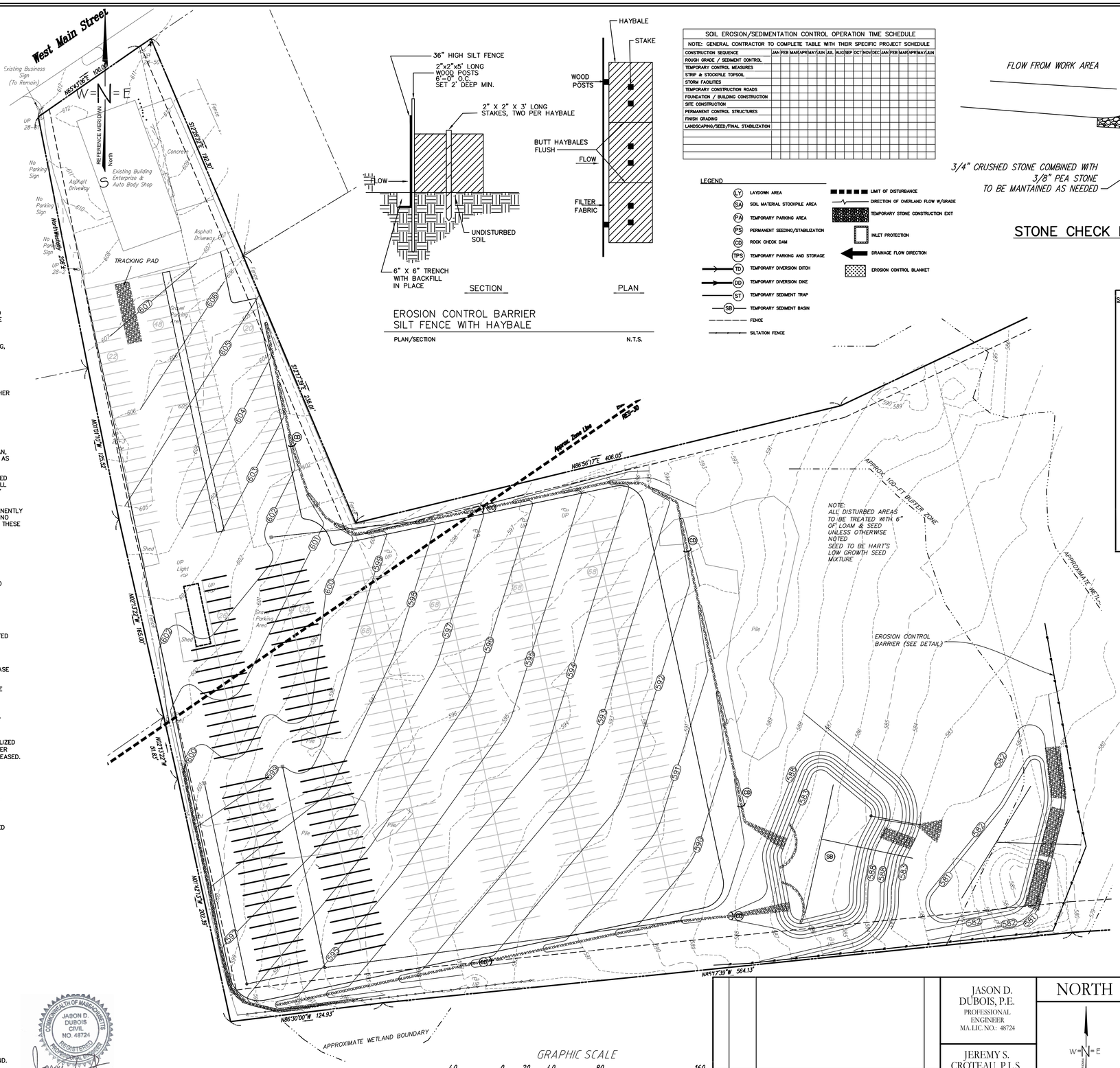

EROSION CONTROL BARRIER
SILT FENCE WITH HAYBALE

PLAN/SECTION N.T.S.

SOIL EROSION/SEDIMENTATION CONTROL OPERATION TIME SCHEDULE

NOTE: GENERAL CONTRACTOR TO COMPLETE TABLE WITH THEIR SPECIFIC PROJECT SCHEDULE

CONSTRUCTION SEQUENCE	JAN	FEB	MAR	APR	MAY	JUN	JUL	AUG	SEP	OCT	NOV	DEC	JAN	FEB	MAR	APR	MAY	JUN
ROUGH GRADE / SEDIMENT CONTROL																		
TEMPORARY CONTROL MEASURES																		
STRIP & STOCKPILE TOPSOIL																		
STORM FACILITIES																		
TEMPORARY CONSTRUCTION ROADS																		
FOUNDATION / BUILDING CONSTRUCTION																		
SITE CONSTRUCTION																		
PERMANENT CONTROL STRUCTURES																		
FINISH GRADING																		
LANDSCAPING/SEED/FINAL STABILIZATION																		

LEGEND

- LY LAYDOWN AREA
- SA SOIL MATERIAL STOCKPILE AREA
- PA TEMPORARY PARKING AREA
- PS PERMANENT SEEDING/STABILIZATION
- CD ROCK CHECK DAM
- TPS TEMPORARY PARKING AND STORAGE
- TD TEMPORARY DIVERSION DITCH
- DD TEMPORARY DIVERSION DIKE
- ST TEMPORARY SEDIMENT TRAP
- SB TEMPORARY SEDIMENT BASIN
- FENCE
- SILTATION FENCE
- LIMIT OF DISTURBANCE
- DIRECTION OF OVERLAND FLOW W/GRADE
- TEMPORARY STONE CONSTRUCTION EXIT
- INLET PROTECTION
- DRAINAGE FLOW DIRECTION
- EROSION CONTROL BLANKET

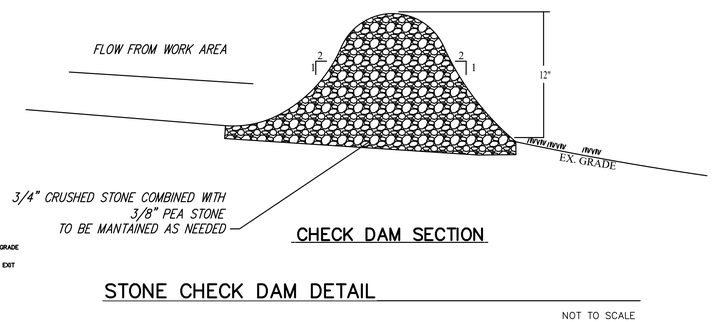

CHECK DAM SECTION

STONE CHECK DAM DETAIL

NOT TO SCALE

SEQUENCE OF CONSTRUCTION

1. INSTALL STABILIZED CONSTRUCTION EXIT(S) AND SWPPP ENTRANCE SIGN.
2. PREPARE TEMPORARY PARKING AND STORAGE AREA UPON IMPLEMENTATION AND INSTALLATION OF THE FOLLOWING AREAS: PARKING, LAY DOWN, PORTA POTTY, MATERIAL STORAGE CONTAINERS, ECT., DENOTE THEM ON THE SITE MAPS IMMEDIATELY AND NOTE ANY CHANGES IN THE LOCATIONS AS THEY OCCUR THROUGHOUT THE CONSTRUCTION PROCESS.
3. INSTALL SILT FENCE(S) ON THE SITE WHERE INDICATED.
4. PREPARE TEMPORARY PARKING AND STORAGE AREA.

HALT ALL ACTIVITIES AND CONTACT THE CIVIL ENGINEERING CONSULTANT TO PERFORM INSPECTION AND CERTIFICATION OF BMP's. GENERAL CONTRACTOR SHALL SCHEDULE AND CONDUCT STORM WATER PRE-CONSTRUCTION MEETING WITH ENGINEER AND ALL GROUND-DISTURBING CONTRACTORS BEFORE PROCEEDING WITH CONSTRUCTION.

5. CONSTRUCT AND STABILIZE SEDIMENT TRAPS.
6. BEGIN GRUBBING THE SITE.
7. BEGIN GRADING THE SITE AND INSTALLING UNDERGROUND INFRASTRUCTURE.
8. TEMPORARILY SEED, THROUGHOUT CONSTRUCTION, DENUDED AREAS THAT WILL BE INACTIVE FOR 14 DAYS OR MORE.
9. PERMANENTLY STABILIZE AREAS TO BE VEGETATED AS THEY ARE BROUGHT TO FINAL GRADE.
10. COMPLETE GRADING AND INSTALLATION OF PERMANENT STABILIZATION OVER ALL AREAS.
11. CALL DC ENGINEERING AFTER THE SITE APPEARS TO BE FULLY STABILIZED FOR AN INSPECTION.
12. REMOVE ALL TEMPORARY EROSION AND SEDIMENT CONTROL DEVICES AFTER APPROVAL OF THE CEC AND STABILIZE ANY AREAS DISTURBED BY THE REMOVAL OF THE BMP.
13. CONTINUE DAILY INSPECTION REPORTS UNTIL THE FINAL DAILY INSPECTION IS SIGNED OFF BY DC ENGINEERING THAT THE SITE IS FULLY STABILIZED AND THE PERMIT MAY BE TERMINATED.
14. EXPECTED DATE OF COMPLETION IS SUMMER OF 2020

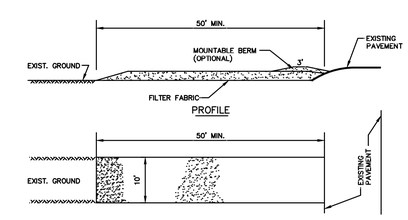

CONSTRUCTION SPECIFICATIONS

1. Stone size – Use 2" stone, or reclaimed or recycled concrete equivalent.
2. Length – As required, but not less than 50 feet.
3. Thickness – Not less than six (6) inches.
4. Width – Ten (10) foot minimum, but not less than the full width at points where ingress or egress occurs.
5. Filter fabric – Will be placed over the entire area prior to placing of stone
6. Surface water – All surface water flowing or diverted toward construction entrances shall be placed across the entrance. If piping is impractical, a mountable berm with 5:1 slopes will be permitted.
7. Maintenance – The entrance shall be maintained in a condition which will prevent tracking or flowing of sediment onto public rights-of-way. This may require periodic top dressing with additional stone as conditions demand and repair and/or cleanout of any measures used to trap sediment. All sediment spilled, dropped, washed, or tracked onto public rights-of-way must be cleaned and or swept by the end of the working day.
8. Washing – Wheels shall be cleaned to remove sediment prior to entrance onto public right-of-way. When washing is required, it shall be done on an area stabilized with stone and which drains into an approved sediment trapping enclosure.
9. Periodic inspection and needed maintenance shall be provided after each rain.

CONSTRUCTION ENTRY

N.T.S.

GRAPHIC SCALE

40 0 20 40 80 160

(IN FEET)
1" = 40'

NO.	DATE	REVISION	BY
1	5/4/20	REVISED PER COMMENTS	JDD

JASON D. DUBOIS, P.E.
PROFESSIONAL ENGINEER
MA.LIC.NO.: 48724

JEREMY S. CROTEAU, P.L.S.
PROFESSIONAL LAND SURVEYOR
LIC.NO.: 48722

NORTH

W N E
S

EROSION CONTROL PLAN

SITE ADDRESS:
263 West Main Street
Dudley, MA

CLIENT:
Sunset City
P.O. Box 394
Charlton, MA 01507

DRAWN BY:	JSC
CK'D BY: JDD	REV #: 1
DATE: 1-8-2020	SCALE: 1'=40'
PROJECT #: 20-101	DWG. NO.: EC-1

DC ENGINEERING & SURVEY INC.
388 CRANBERRY MEADOW RD
CHARLTON, MA
508-769-8850
508-341-2127

NOTES:
SOIL MEDIA TO CONSIST OF A MIXTURE OF 40% SAND, 20–30% TOPSOIL, AND 30–40% COMPOST.

PLANT WITH DENSE NATIVE PLANTS. USE AT LEAST THREE PLANT SPECIES. USE PLANTS SUCH AS BROOMSEDGE, FOX SEDGE, SWEET PEPPERBUSH, SILKY DOGWOOD, WITCH HAZEL, WINTERBERRY, SPICEBUSH, BAYBERRY, ARROW-WOOD, RED MAPLE, GRAY BIRCH.

TOWN OF DUDLEY PLANNING BOARD APPROVAL:

DATE:

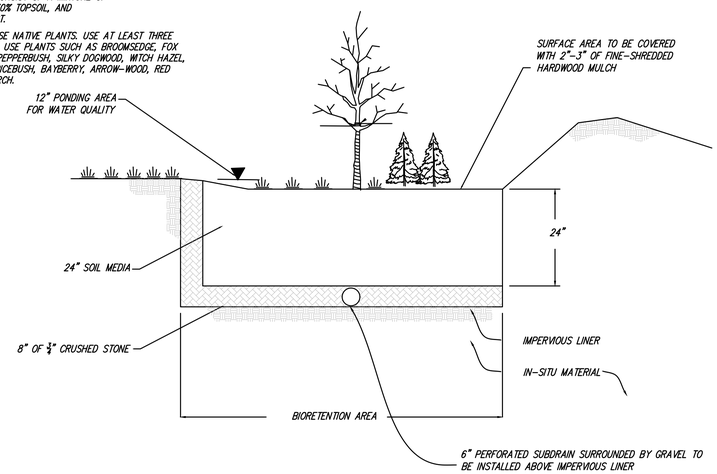

BIORETENTION AREA CROSS SECTION

NOT TO SCALE

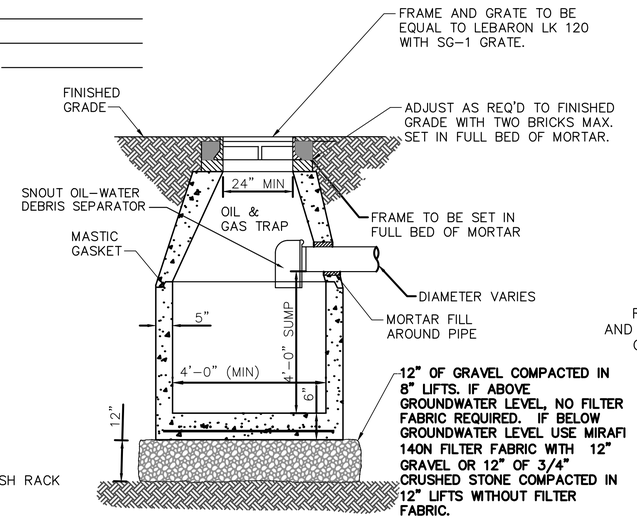

DEEP SUMP CATCH BASIN

NOT TO SCALE

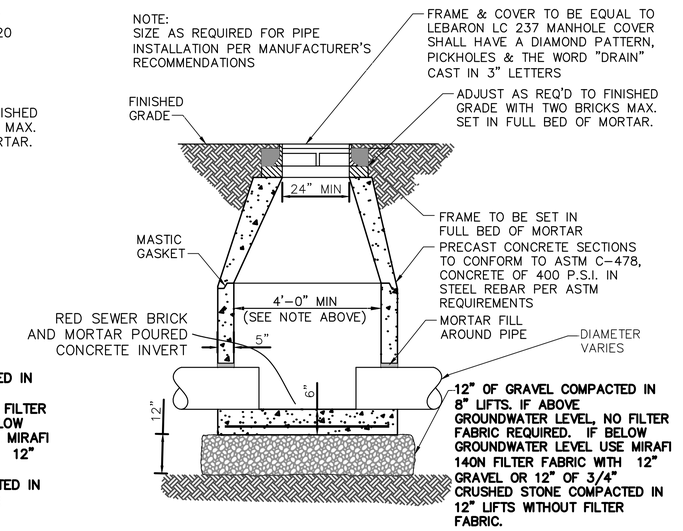

STANDARD DRAIN MANHOLE DETAIL

NOT TO SCALE

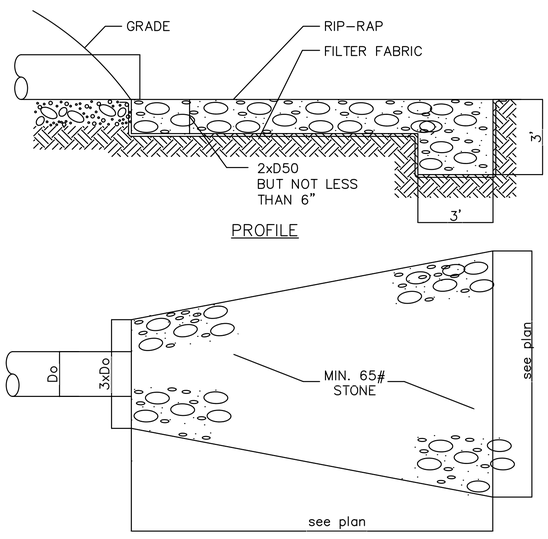

RIP RAP APRON DETAIL

NOT TO SCALE

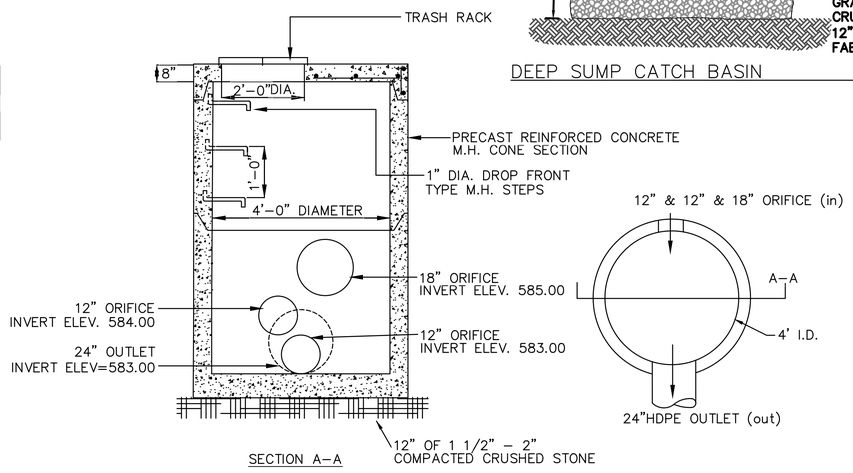

OUTLET CONTROL STRUCTURE DETAIL

NOT TO SCALE

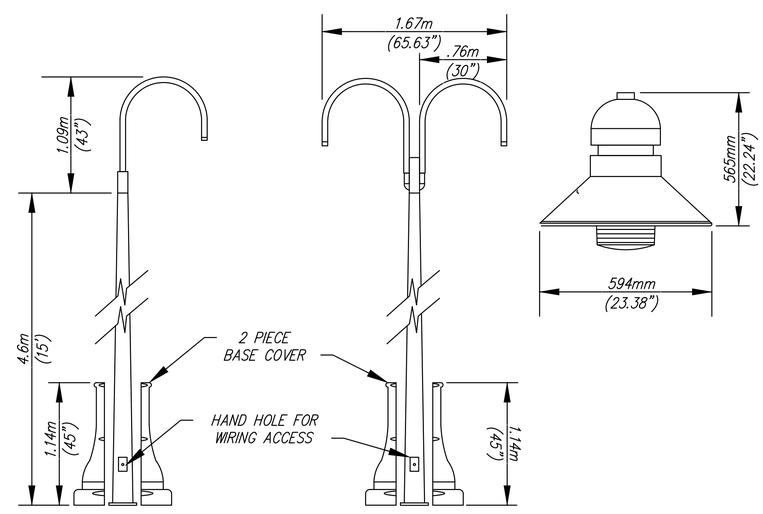

LIGHTING DETAIL

NOT TO SCALE

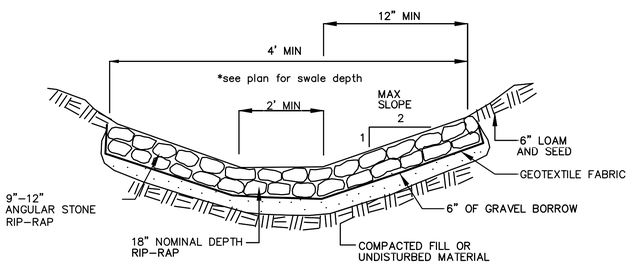

RIP-RAP SWALE SLOPES

NOT TO SCALE

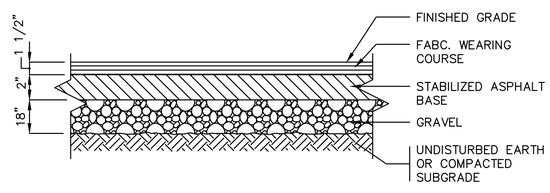

ASPHALT PAVEMENT DETAIL

NOT TO SCALE

NO.	DATE	REVISION	BY
1	5/4/20	REVISED PER COMMENTS	JDD

JASON D. DUBOIS, P.E.
PROFESSIONAL ENGINEER
MA.LIC.NO.: 48724

JEREMY S. CROTEAU, P.L.S.
PROFESSIONAL LAND SURVEYOR
LIC.NO.: 48722

NORTH

SITE DETAILS
SITE ADDRESS:
263 West Main Street
Dudley, MA

CLIENT:
Sunset City
P.O. Box 394
Charlton, MA 01507

DRAWN BY:	JSC
CK'D BY: JDD	REV #: 1
DATE: 1-8-2020	SCALE: NTS
PROJECT #: 20-101	DWG. NO.: D-1

DC ENGINEERING & SURVEY INC.
3836 CHARLTON-DUDLEY ROAD
CHARLTON, MA
508-769-6850
508-341-2127